NOTES:

REVISIONS			
REV	DESCRIPTION	DATE	APPROVED
A	ECR 8000003574: REL TO PRODUCTION PER EAO 601665	17SEP14 JJH	MB XA

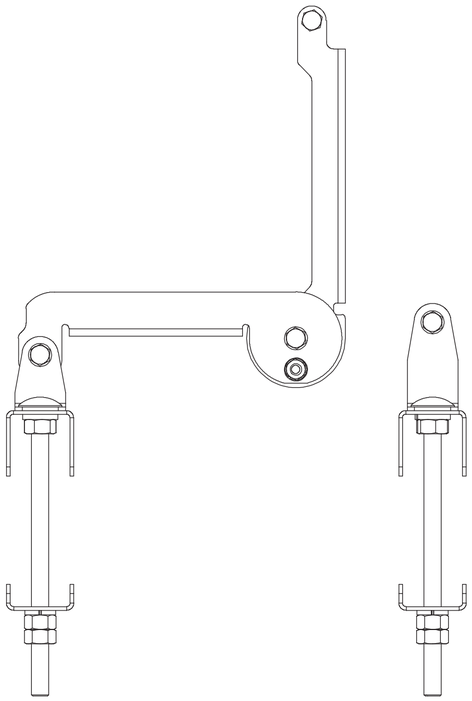

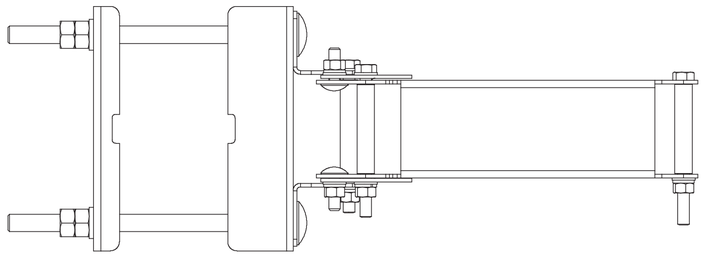

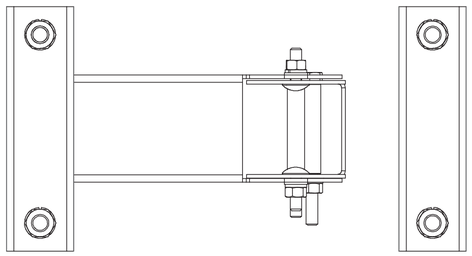

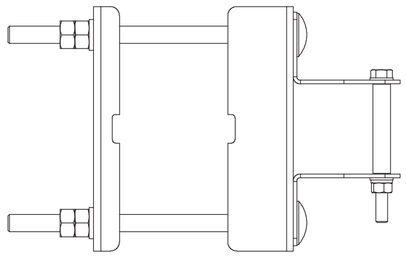

HB65-OFFSET-MNT

CONFIDENTIAL

MATERIAL N/A	DENSITY: MASS: 3.660 Kg	UNLESS OTHERWISE SPECIFIED DIMENSIONS ARE IN MILLIMETERS INTERPRET PER ISO STANDARDS HANDBOOK,TECHNICAL DRAWINGS, VOLUMES 1 & 2, THIRD EDITION (2002)	ANDREW® WESTCHESTER, IL. 60154 U.S.A.
FINISH N/A	TOLERANCES 0 PLACE X ± 1 PLACE .X ± 2 PLACE .XX ± ANGLES ±	THIRD ANGLE PROJECTION	MOUNT; SPECIAL; HBX OFFSET
	ALL SURFACES √	DRAWN BY JJH 17SEP14 ECN 8000003574-O AUTH. GROUP 23	SIZE A2 CAGE CODE 84147 DOCUMENT NO. HB65-OFFSET-MNT-L

MODEL VERSION	MODEL STATUS	MODEL REVISION	DRAWING VERSION	DRAWING STATUS	DRAWING REVISION	SHEET
00	RE	A	00	RE	A	1 OF 1

NOTICE: These drawings and specifications are the proprietary property of ANDREW CORPORATION and may be used only for the specific purpose authorized in writing by Andrew.