THIS DRAWING IS UNPUBLISHED. RELEASED FOR PUBLICATION -,- .
© 2016 Commscope, INC. Confidential NOTICE: These drawings and specifications are the proprietary property of COMMSCOPE, INC. and may be used only for the specific purpose authorized in writing by COMMSCOPE, INC.

REVISIONS					
P	LTR	DESCRIPTION	DATE	DWN	APVD
	D	REVISED PER ECN 8000019828	24FEB2017	GG	TE

PART NUMBER	FIBER TYPE 1.1 2.2	MAX ATTENUATION (dB/km)				MINIMUM OVERFILLED LAUNCH BANDWIDTH (MHz*km)		MINIMUM EFFECTIVE MODAL BANDWIDTH (MHz*km)	MINIMUM 10 GIGABIT ETHERNET LINK DISTANCE (meters)	JACKET COLOR 1.3	FIBER SPECIFICATION
		850nm	1300nm	1310nm	1550nm	850nm	1300nm	850nm	850nm		
1-1553604-2	50/125 OM2	3.5	1.5	N/A	N/A	500	500	N/A	82	ORANGE	TIA-492AAAB-XBBX7
7-1553604-3	SINGLE-MODE BIF	N/A	N/A	0.5	0.5	N/A	N/A	N/A	N/A	YELLOW	ITU-T G.657.A1

1. CABLE CONSTRUCTION:

1.1 BEND INSENSITIVE OPTICAL FIBER SEE TABLE FOR TYPE.

1.2 PVC TIGHT BUFFER: 900±50μm COLOR CODED PER TIA-598.

1.3 PVC JACKET: SEE TABLE FOR COLOR. COLOR SPECIFICATION PER EIA-359.

2. LEGEND:

2.1 LEGEND REPEATED EVERY TWO FEET IN CONTRASTING COLOR INK.

2.2 SEE TABLE FOR APPROPRIATE LEGEND PRINTING.

2.3 MM/YY = MONTH/YEAR

2.4 SO XXXXXX = SHOP ORDER NUMBER.

2.5 XXXXX = SEQUENTIAL FOOT MARKING.

3. RATINGS:

3.1 UL OR ETL LISTED TYPE OFCP AND CSA FT6.

3.2 QUALIFIED TO TELCORDIA GR-409-CORE.

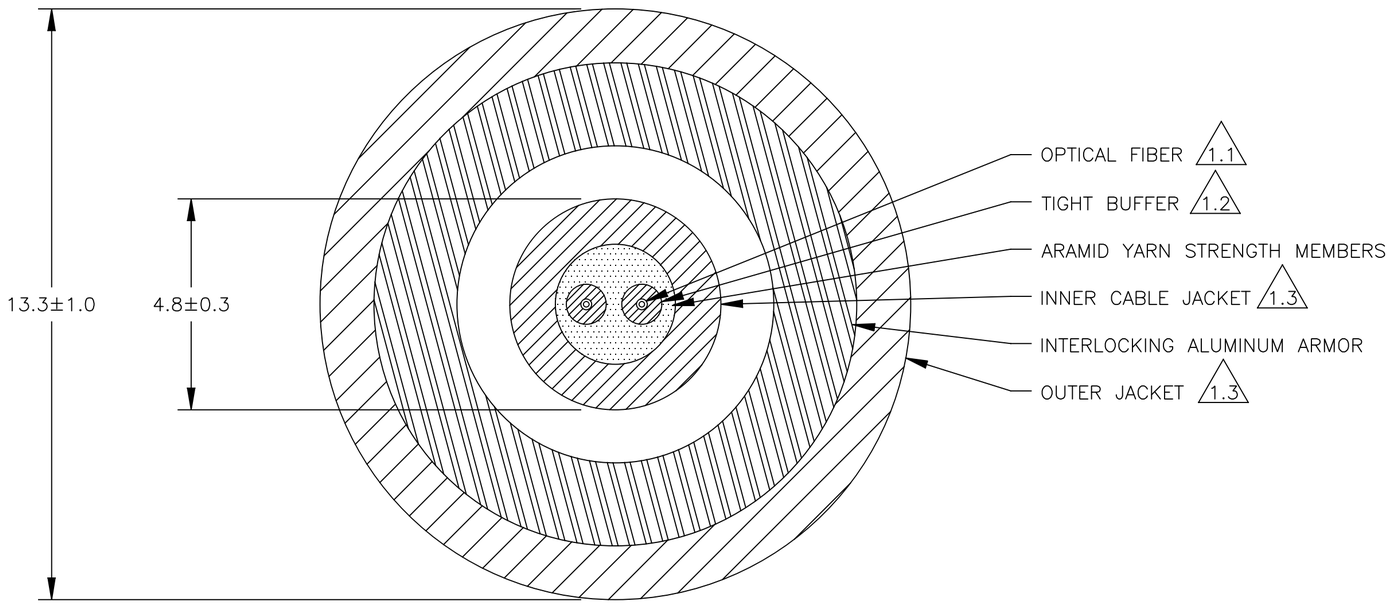

2.2 2.3 2.4 2.5

COMMSCOPE 2 FIBER 50/125 OM2 OFCP-FT6 c(UL)us OFCP MM/YY SO XXXXXXXXX XXXXX FEET

LEGEND 2.1

THIS DRAWING IS A CONTROLLED DOCUMENT.		DWN A. BROUGHTON 08JAN10	COMMSCOPE, INC.
DIMENSIONS: mm	TOLERANCES UNLESS OTHERWISE SPECIFIED: 0 PLC ± - 1 PLC ± - 2 PLC ± - 3 PLC ± - 4 PLC ± - ANGLES ± -	CHK A. BROUGHTON 08JAN10	NAME CABLE, ILJA, DUALAN, OFCP
		APVD M. KEPKO 08JAN10	
		PRODUCT SPEC —	
		APPLICATION SPEC —	SIZE A2 / DRAWING NO C-1553604 / RESTRICTED TO —
MATERIAL -	FINISH -	WEIGHT —	
		CUSTOMER DRAWING	SCALE NTS / SHEET 1 OF 1 / REV D

1553604